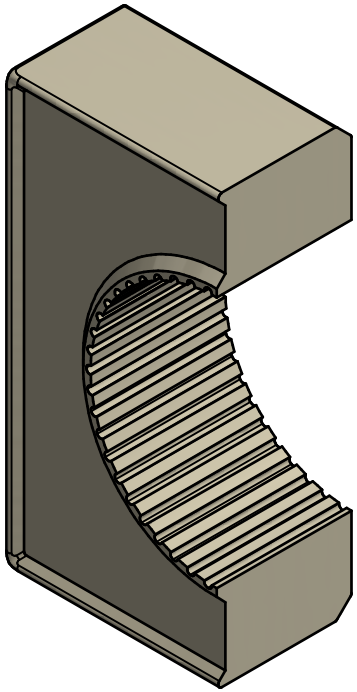

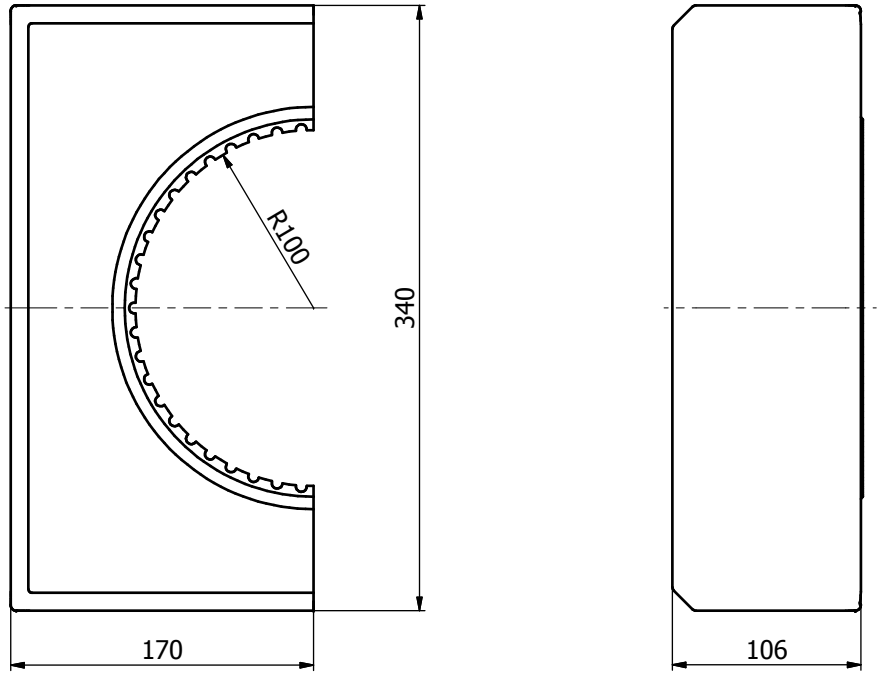

DEFRO HOME

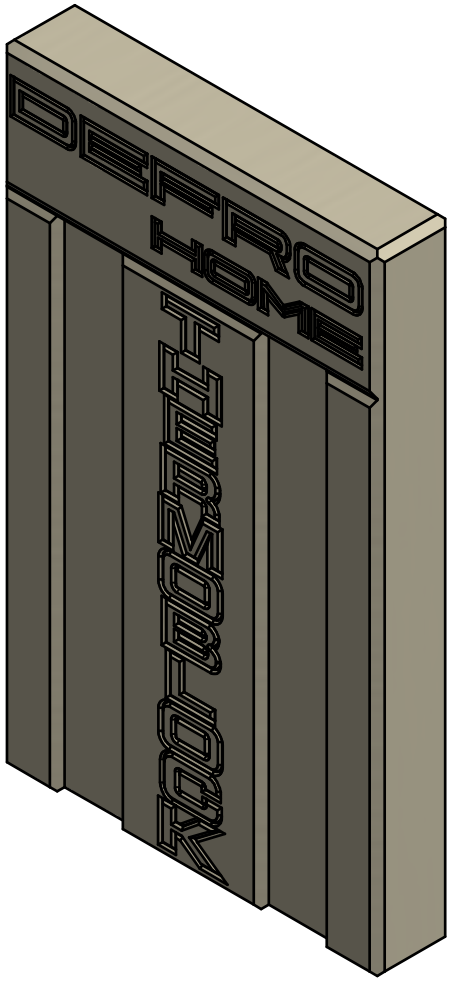

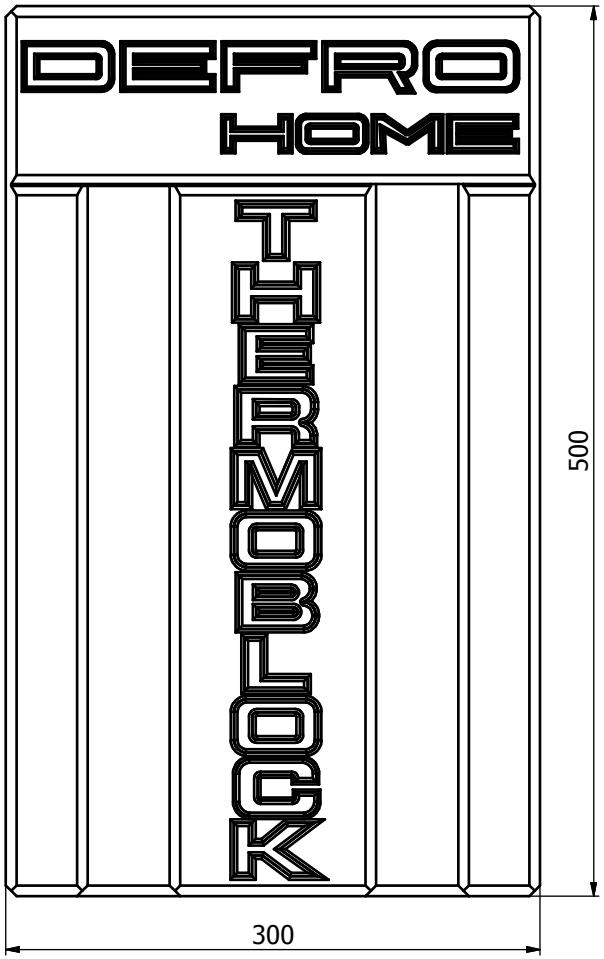

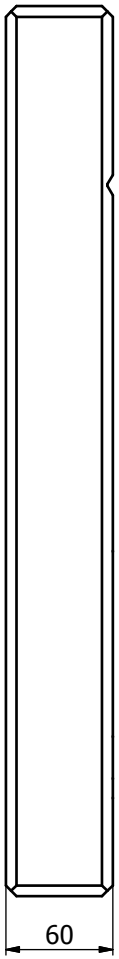

DEFRO
HOME

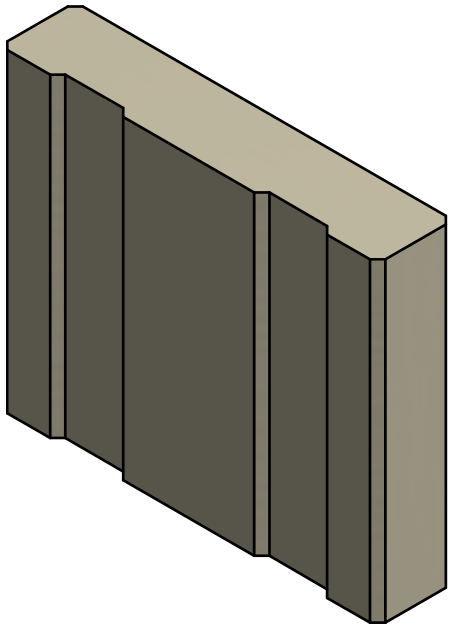

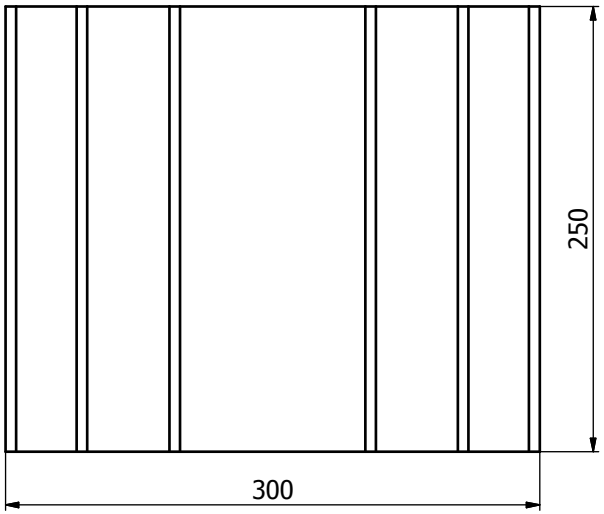

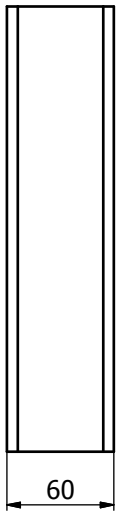

DEFRO HOME

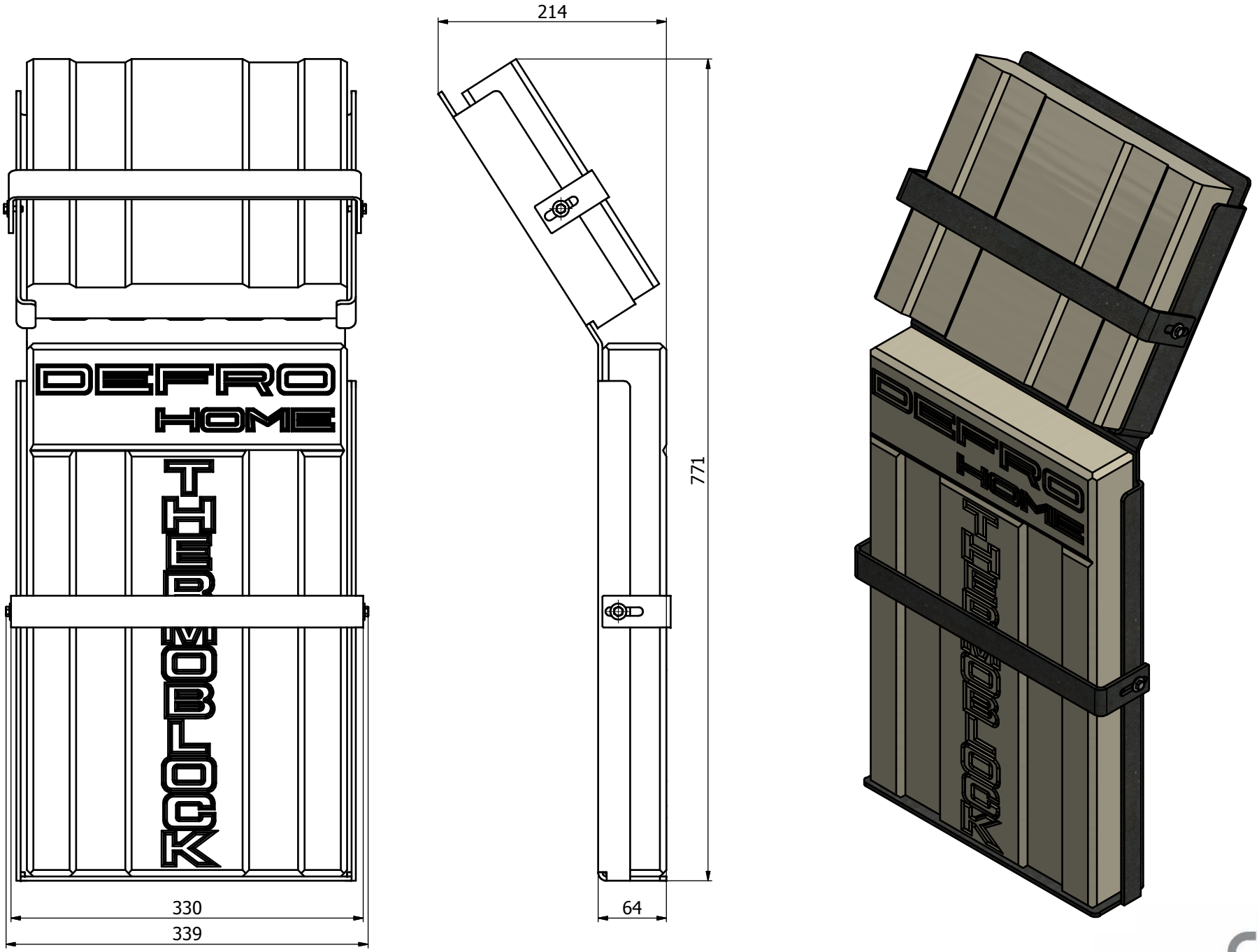

DEFRO
HOME

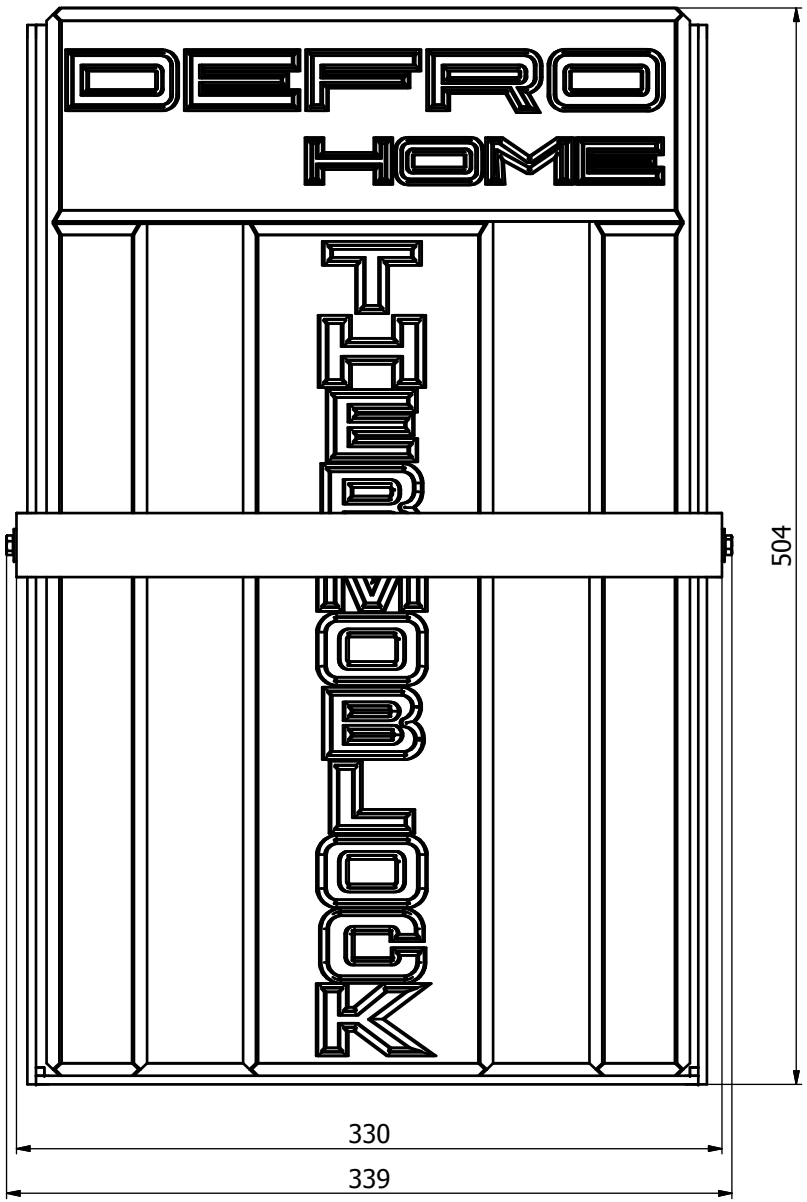

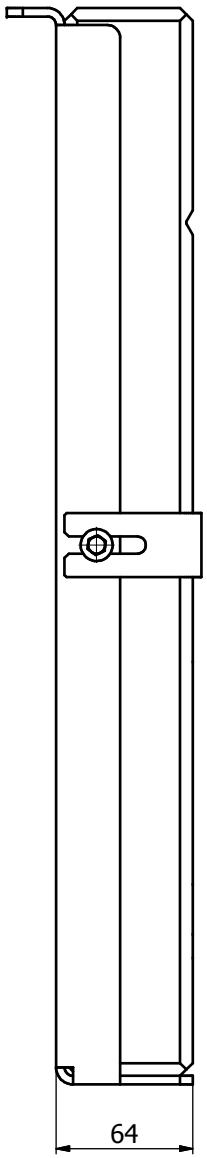

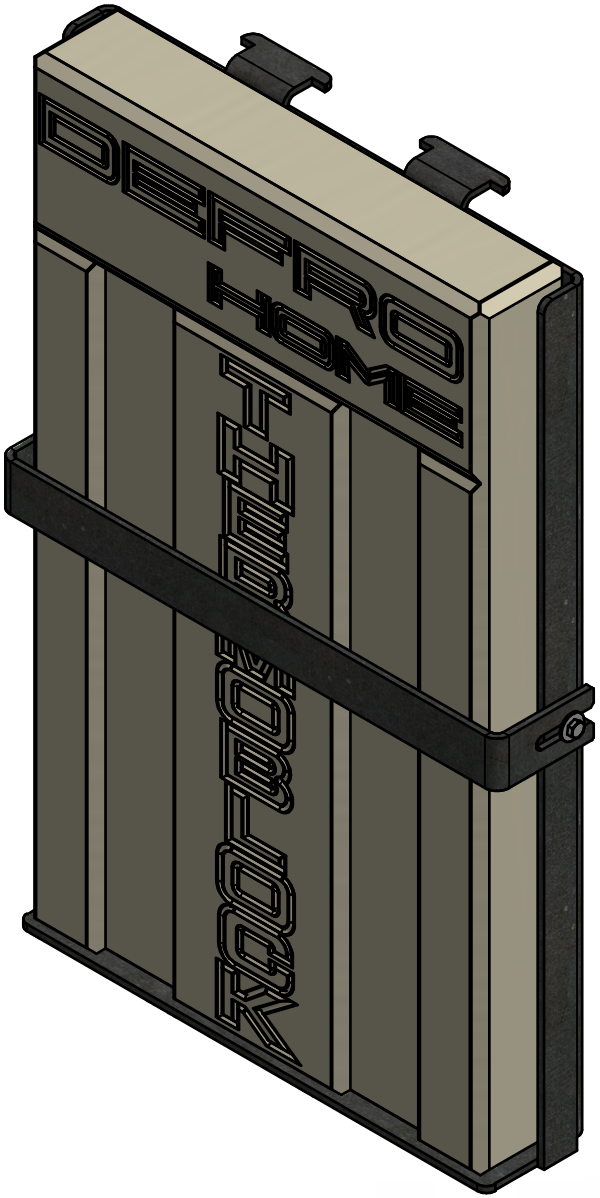

DEFRO
HOME

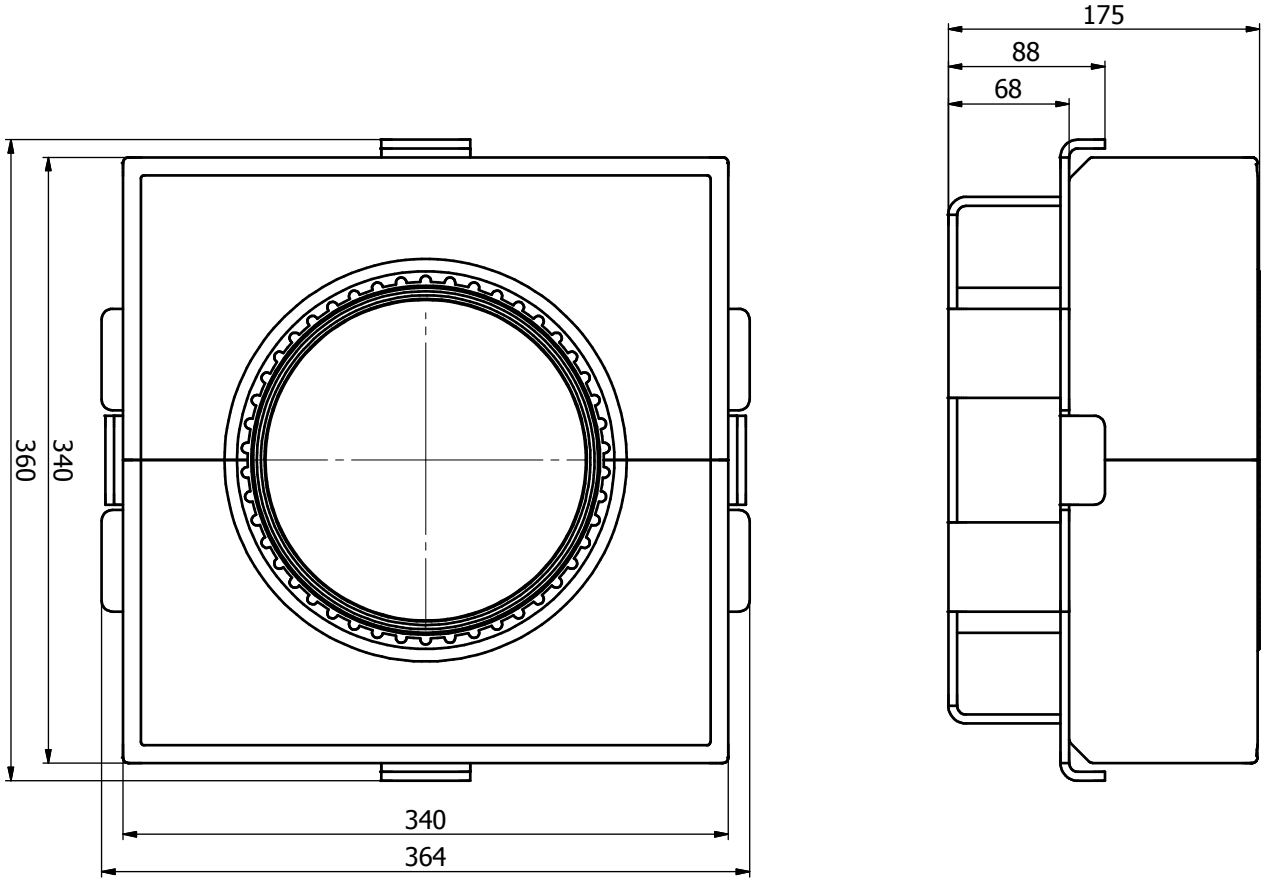

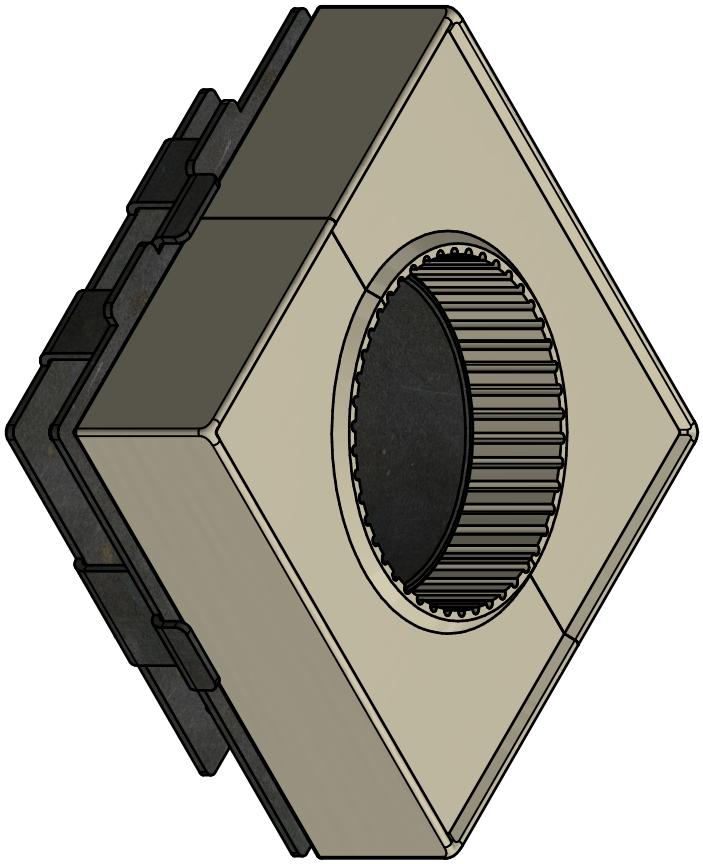

DEFRO HOME